SALES DRAWING SALES DRAWING

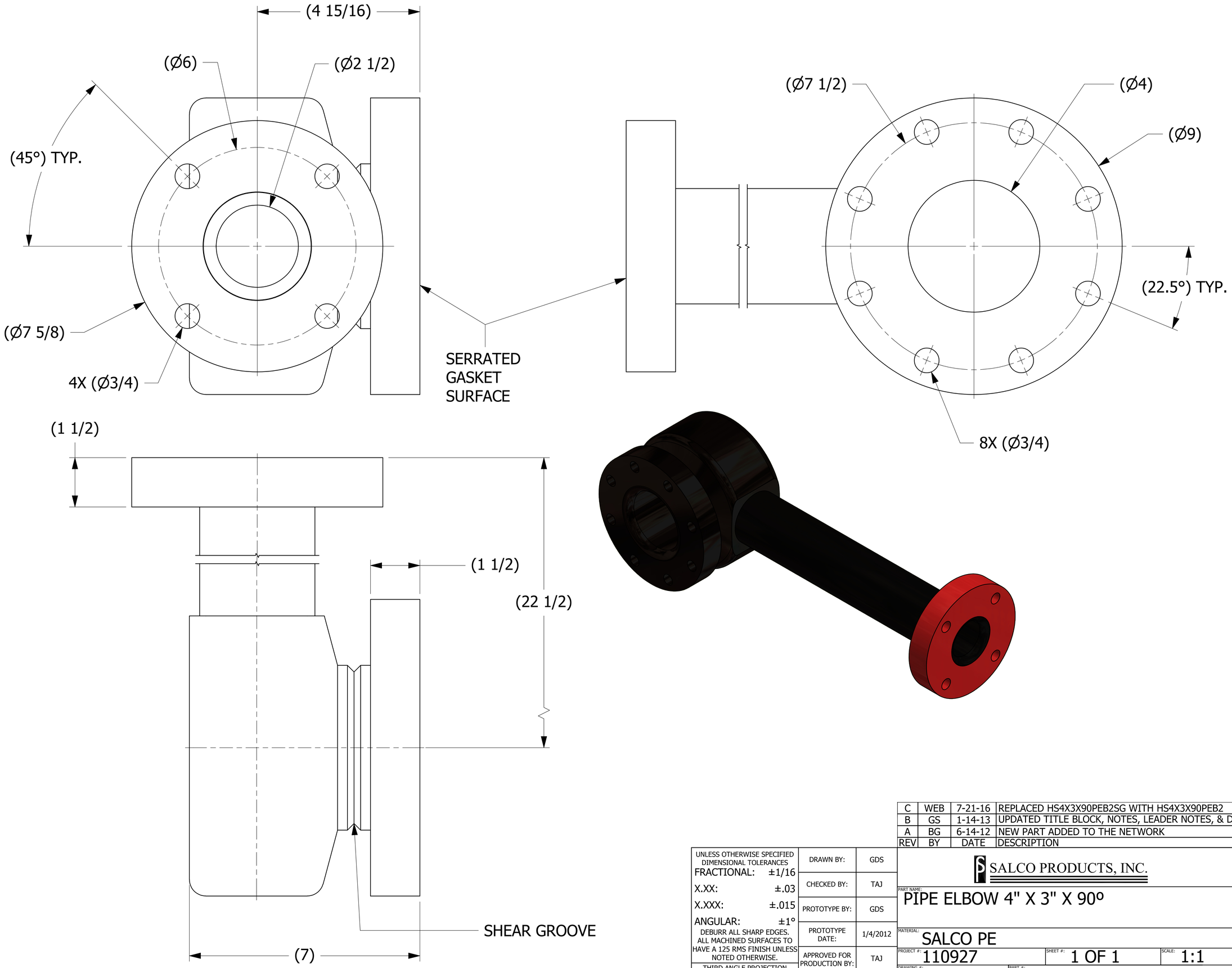

SALES DRAWING SALES DRAWING

REV	BY	DATE	DESCRIPTION
C	WEB	7-21-16	REPLACED HS4X3X90PEB2SG WITH HS4X3X90PEB2
B	GS	1-14-13	UPDATED TITLE BLOCK, NOTES, LEADER NOTES, & DIMS.
A	BG	6-14-12	NEW PART ADDED TO THE NETWORK

UNLESS OTHERWISE SPECIFIED
DIMENSIONAL TOLERANCES
FRACTIONAL: ±1/16
X.XX: ±.03
X.XXX: ±.015
ANGULAR: ±1°
DEBURR ALL SHARP EDGES.
ALL MACHINED SURFACES TO HAVE A 125 RMS FINISH UNLESS NOTED OTHERWISE.
THIRD ANGLE PROJECTION

DRAWN BY:	GDS
CHECKED BY:	TAJ
PROTOTYPE BY:	GDS
PROTOTYPE DATE:	1/4/2012
APPROVED FOR PRODUCTION BY:	TAJ
PRODUCTION DATE:	6/14/2012

SALCO PRODUCTS, INC.

PART NAME: PIPE ELBOW 4" X 3" X 90º

MATERIAL: SALCO PE

PROJECT #: 110927 | SHEET #: 1 OF 1 | SCALE: 1:1

DRAWING #: E33242 | PART #: HS4X3X90PE4SG

THIS PRINT, PROPERTY OF SALCO PRODUCTS INC, CONTAINS PROPRIETARY INFORMATION AND MUST NOT BE COPIED, REPRODUCED, OR USED DETRIMENTALLY TO OUR INTEREST.